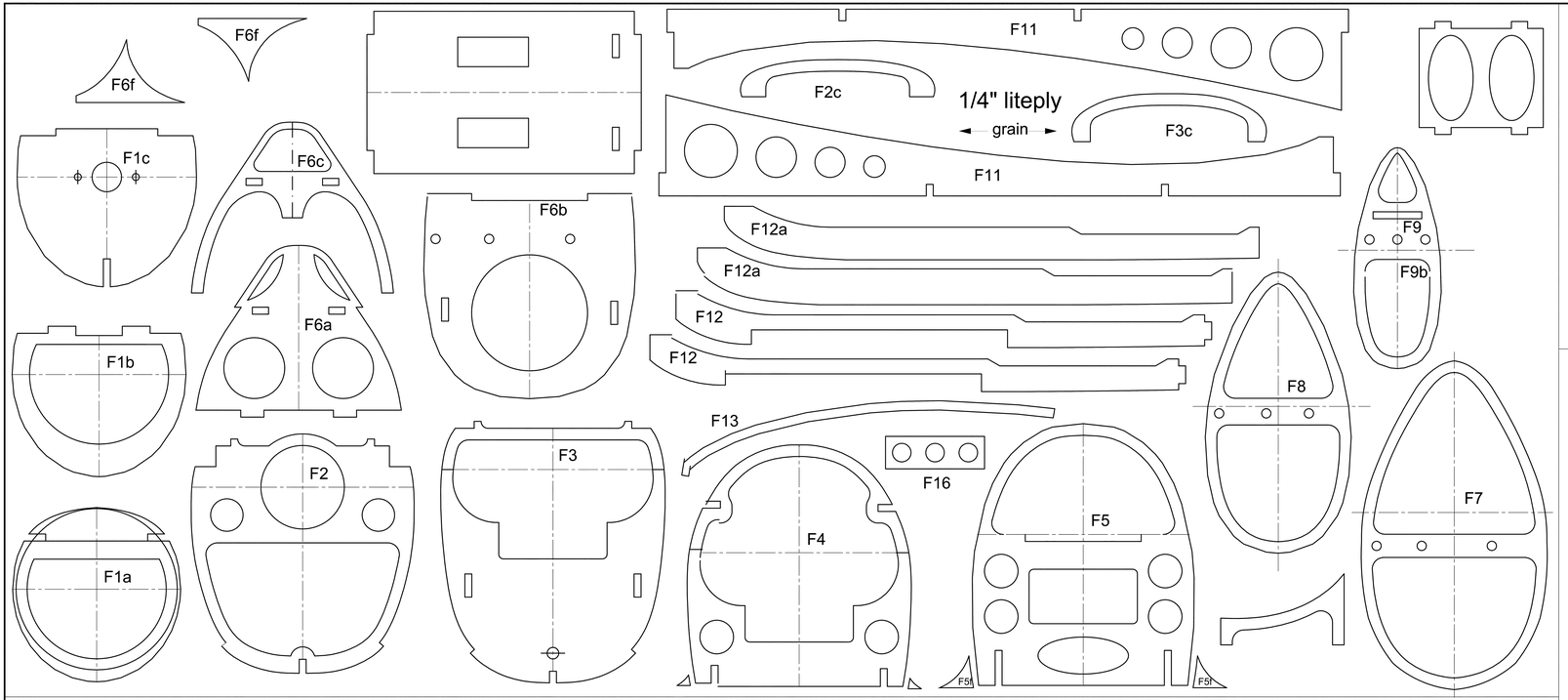

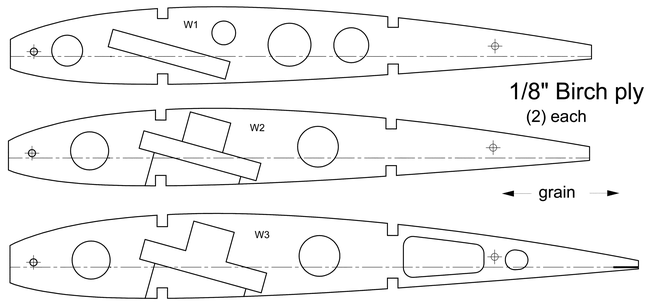

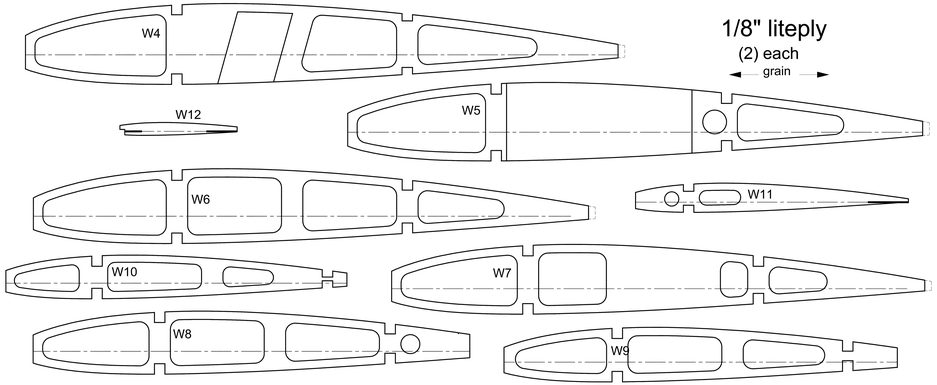

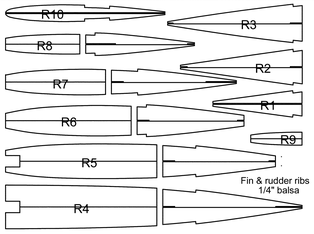

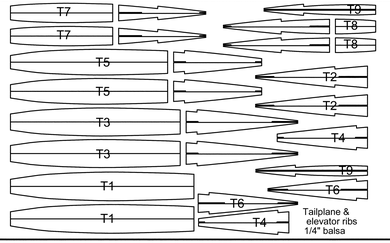

TEMPLATE SHEET

SUPERMARINE SPITFIRE	
AIR CLASSICS DESIGNS FOR ENTHUSIASTS BY ENTHUSIASTS	
QUARTER - SCALE SUPERMARINE SPITFIRE FOR 1.20 AND LARGER ENGINES WING SPAN 111"	5

AIR CLASSICS ASSUMES NO LIABILITY OR RESPONSIBILITY FOR THE USE OF ABOVE PLANS OR THE MODELS BUILT FROM THESE DRAWINGS. THE USER OF THESE PLANS, THROUGH BUILDING AND FLYING, ASSUMES ALL RESPONSIBILITIES FOR THE AIRCRAFT AND ANY DAMAGE OR HARM INCURRED THROUGH ITS USE.